LONG SEAMS

COURSE	ORIENTATION	ORIENTATION
1 (TOP)	75°	255°
2	79°	259°
3	75°	255°
4	79°	259°
5	75°	255°
6	79°	259°
7	75°	255°
8	79°	259°
9	75°	255°
10	79°	259°
11	75°	255°
12	79°	259°

*VERT – TOP TO BOTTOM

Ship loose items:
NONE

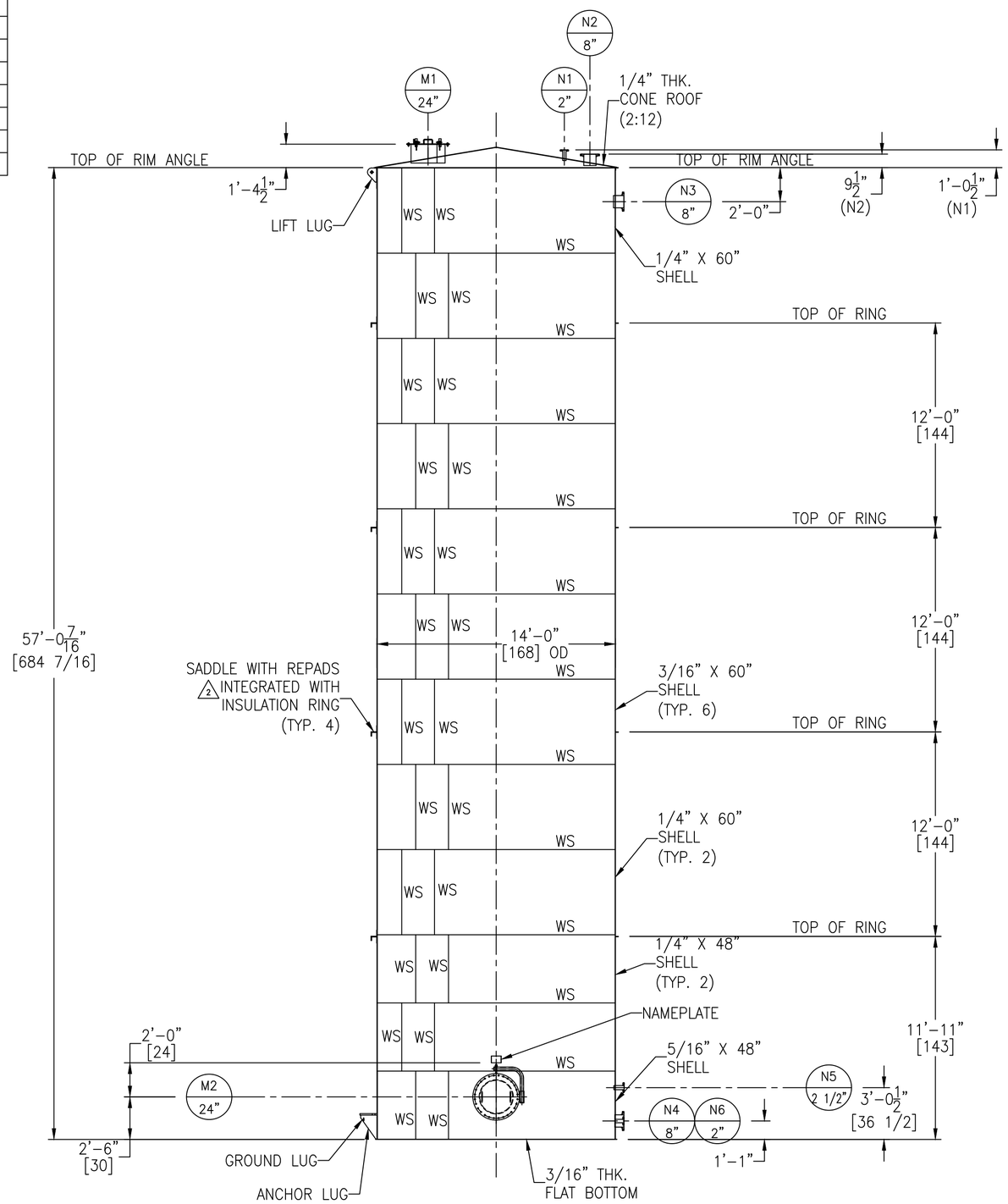

FC-14 GT-11

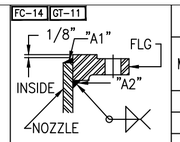

FIGURE NO. 1

FC-14 GT-11

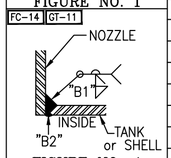

FIGURE NO. 4

FC-14 GT-11

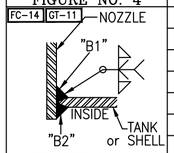

FIGURE NO. 7

FC-14 SA-30

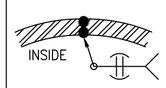

SHELL THK. < 5/16"

FIGURE NO. 9

FC-14 SA-30

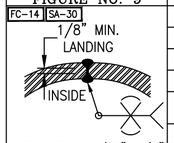

SHELL THK. 5/16"-3/4"
FIGURE NO. 10

NOZZLE SCHEDULE

MARK	SERVICE	SIZE	RATING	TYPE / STYLE	NECK SCHED.	PROJECTION EXT. (E)	PROJECTION INT. (MIN.)	WELD FIGURE	REPAD SIZE (WIDTH X THK.)	WELD SIZE "A1"	WELD SIZE "A2"	WELD SIZE "B1"	WELD SIZE "B2"	WELD SIZE "C1"	WELD SIZE "C2"
N1	–	2"	150#	RFSO	40S	SEE DWG	1"	1,7	–	1/8	1/8	1/4	1/8	–	–
N2	–	8"	150#	RFSO	40S	SEE DWG	1"	1,7	–	1/4	1/4	1/4	1/8	–	–
N3	–	8"	150#	RFSO	40S	6"	1"	1,7	–	1/4	1/4	1/4	1/4	–	–
N4	–	8"	150#	RFSO	40S	6"	–	1,4	–	1/4	1/4	1/4	1/8	–	–
M1	–	24"	–	API W/ HINGE	1/4"	SEE DWG	1"	7	–	–	–	3/16	1/8	–	–
M2	–	24"	–	API W/ DAVIT	1/4"	8"	1"	7	–	–	–	1/4	1/8	–	–
N5	–	2 1/2"	150#	RFSO	40S	6"	1"	1,7	–	1/8	1/8	1/4	1/4	–	–
N6	–	2"	150#	RFSO	80S	6"	–	1,4	–	1/8	1/8	1/4	1/8	–	–

MATERIALS OF CONSTRUCTION

	VESSEL
SHELL	SA240-304/304L
HEADS	SA240-304/304L
RIM ANGLE	SA479-304/304L
NOZZLE NECKS	SA312-304/304L WLD
NOZZLE FLANGES	SA182F-304/304L
MANWAY NECKS	SA240-304/304L
MANWAY FLANGES	SA240-304/304L
GASKETS	GARLOCK 3000
BOLTS/STUDS	SA193-B7 (ZINC PLATED)
NUTS	SA194-2H (ZINC PLATED)
REPADS	SA240-304/304L
COUPLINGS	–
SUPPORTS/HOLD DOWNS	SA240-304/304L
LIFTING LUGS	SA240-304/304L
VACUUM RINGS	–
INSULATION RINGS	SA240-304/304L
GROUND LUG	SA240-304/304L
BAFFLE	–
LADDER	–
TANK CLIPS (LADDER)	–
HANDRAIL	–
HANDRAIL CLIPS	–
PLATFORM	–
PLATFORM CLIPS	–
DIPTUBE SUPPORT	–
JACKET SHELL	–
JACKET HEADS	–
JACKET NOZZLE NECKS	–
JACKET NOZZLE FLANGES	–

DESIGN DATA

	VESSEL
DESIGN AND FAB. CODE	API650
CERT. STAMP REQ'D.	NO
DESIGN PRESSURE	ATM
DESIGN TEMPERATURE	120° F
MIN. DESIGN METAL TEMP.	-20° F @ ATM
OPERATING PRESSURE	–
OPERATING TEMPERATURE	–
JOINT EFFICIENCY HEADS	0.70
JOINT EFFICIENCY SHELL	0.70
CORROSION ALLOWANCE	0"
SPECIFIC GRAVITY	1.0
EARTHQUAKE ZONE	Ss = (0.385) S1 = (0.129)
WIND LOAD	123 MPH
STRESS RELIEF	NOT REQ'D
RADIOGRAPHIC EXAM	NOT REQ'D
DYE PENETRANT EXAM	NOT REQ'D
MAGNETIC PARTICLE EXAM	NOT REQ'D
HYDROSTATIC TEST	–
PNEUMATIC TEST	2 PSIG / GAUGE #1
JKT DESIGN AND FAB. CODE	–
JKT CERT. STAMP REQ'D.	–
JKT DESIGN PRESSURE	–
JKT DESIGN TEMPERATURE	–
JKT MIN. DESIGN METAL TEMP.	–
JKT OPERATING PRESSURE	–
JKT OPERATING TEMPERATURE	–
JKT JOINT EFFICIENCY HEADS	–
JKT JOINT EFFICIENCY SHELL	–
JKT HYDRO TEST	–

VESSEL FINISH

INTERIOR WELD TREATMENT:	SAV TANK STANDARD
EXTERIOR WELD TREATMENT:	SAV TANK STANDARD
SAV TANK FINISHING STANDARD:	SEE NOTE 6
INSULATION:	2 2" BY OTHERS
PAINTING:	N/A

VESSEL CAPACITY AND WEIGHTS

OPERATING CAPACITY	–
FULL CAPACITY	65,150 GAL.
EMPTY SHIPPING WEIGHT	33,900 LBS.
WEIGHT FULL OF WATER	582,300 LBS.
WEIGHT FULL OF PRODUCT	582,300 LBS.

QUALITY CONTROL

ENG. _____ DATE: _____

Q.C. _____ DATE: _____

This drawing is issued for customer approval. please review, make approval changes (if any) in red. check the appropriate box, sign & date.

- ☐ Approval – no changes. Please proceed with fabrication.
- ☐ Approved as noted. Please proceed with fabrication
- ☐ Not approved. Please make changes and resubmit.

Customer signature _____ Date _____

GENERAL NOTES

1.) COVER ALL FLANGES, OPENINGS & MACHINED SURFACES PRIOR TO SHIPMENT UNLESS OTHERWISE NOTED.

2.) BOLT HOLES TO STRADDLE 0° & 180° UNLESS OTHERWISE NOTED.

3.) NOZZLE REPADS TO HAVE (1) ø1/4" NPT TELL-TALE HOLES ON HORIZONTAL CENTER LINE.
ALL OTHER REPADS TO HAVE (1) ø1/4" WEEP HOLE AT LOWEST POINT ON PAD.

4.) MANUFACTURING TOLERANCE TO BE IN ACCORDANCE WITH API STANDARD 650 7.5.

5.) ASME MATERIALS TO CONFORM TO THE FOLLOWING: FLANGES – B16.5, FITTINGS – B16.9 & COUPLINGS – B16.11.

6.) PICKLE ALL EXTERIOR WELDS. PASSIVATE INTERIOR & EXTERIOR OF VESSEL.

REVISIONS

REV	D.BY	C.BY	DATE	DESCRIPTION
				AS BUILT
2	RS	AD	4/1/25	CERTIFIED REV 1
1	RS	AD	2/12/25	CERTIFIED
0	RS	AD	12/13/24	APPROVAL

Savannah Tank & Equipment Corp.
1517 Telfair Road, Savannah, GA 31415
(912) 233-8902

DRAWN BY: RS
CHK'D BY: AD
APPROVED BY: NP
SCALE: 3/16" = 1'-0"

CDM-INC
CHILL WATER TANK
EQUIP. #
CUST. PO #24-1101-01

DRAWING NO.: 062-24-1 SHT 1 OF 5 REV. SET 2

LONG SEAMS

COURSE	ORIENTATION	ORIENTATION
1 (TOP)	75°	255°
2	79°	259°
3	75°	255°
4	79°	259°
5	75°	255°
6	79°	259°
7	75°	255°
8	79°	259°
9	75°	255°
10	79°	259°
11	75°	255°
12	79°	259°

*VERT – TOP TO BOTTOM

Ship loose items:
NONE

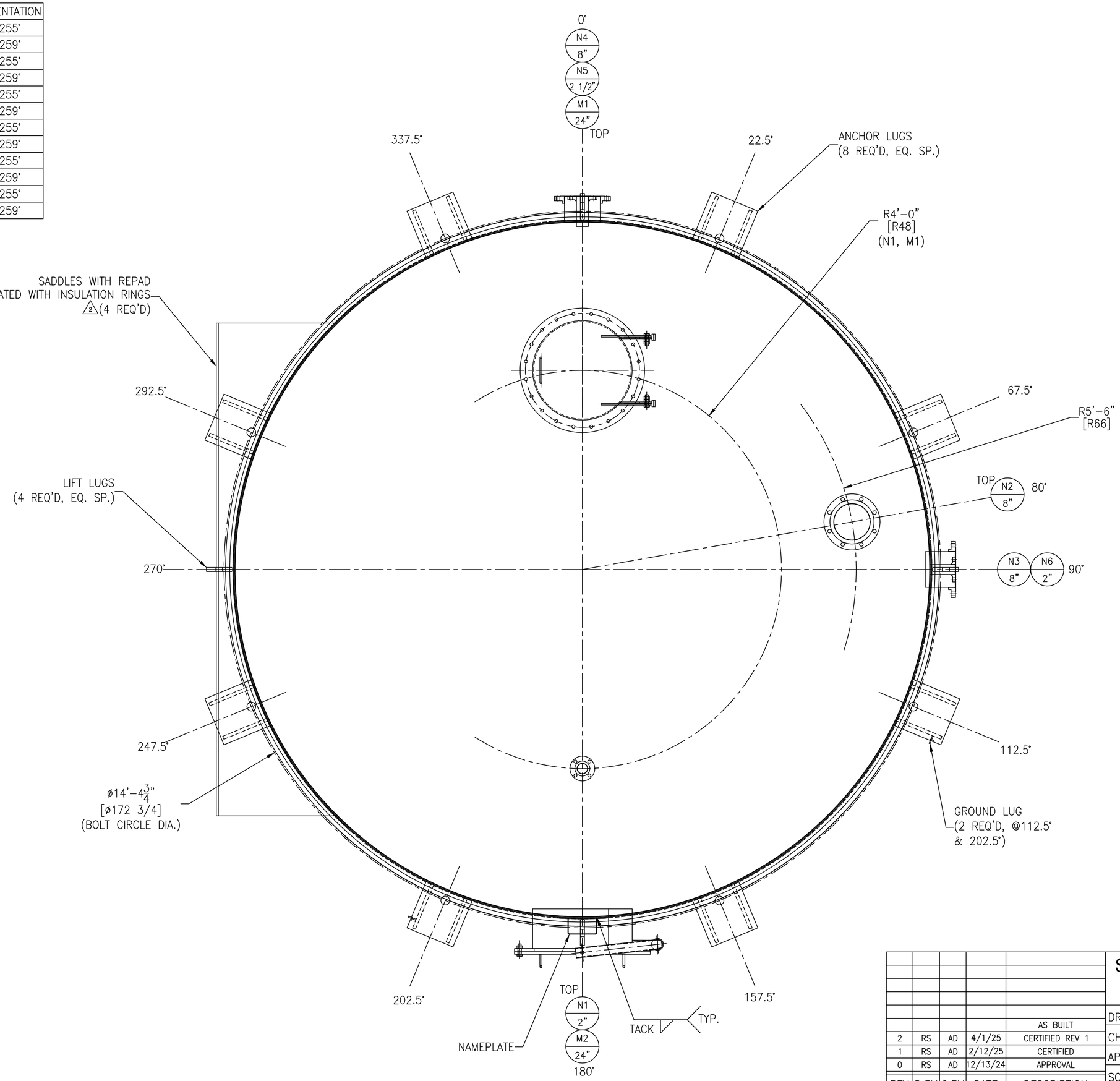

REV	D.BY	C.BY	DATE	DESCRIPTION
				AS BUILT
2	RS	AD	4/1/25	CERTIFIED REV 1
1	RS	AD	2/12/25	CERTIFIED
0	RS	AD	12/13/24	APPROVAL

1 REVISIONS

Savannah Tank & Equipment Corp.
1517 Telfair Road, Savannah, GA 31415
(912) 233–8902

DRAWN BY: RS
CHK'D BY: AD
APPROVED BY: NP
SCALE: 3/4" = 1'–0"

CDM–INC
CHILL WATER TANK
EQUIP. #
CUST. PO #24–1101–01

DRAWING NO.: 062–24–2 SHT 2 OF 5 REV. SET 2

SHOP RELEASE DATE: 2/24/25 SET # .

FC-14

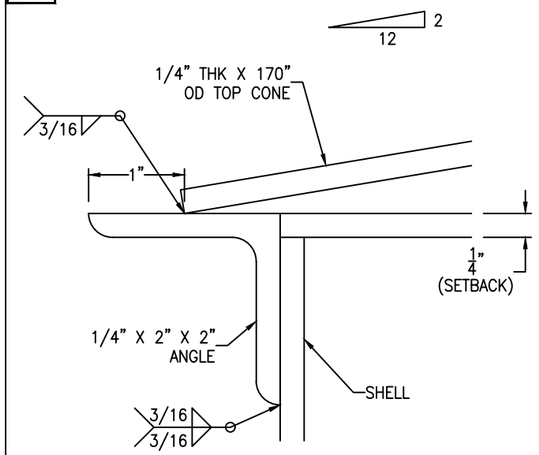

RIM ANGLE DETAIL

SCALE: 1'-0" = 1'-0"

FC-14

*NOTCH TO MAKE ROOM FOR SADDLES.

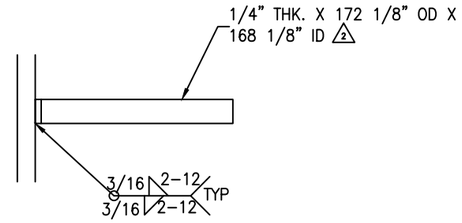

INSULATION RING DETAIL

(4 REQ'D) SCALE: 1'-0" = 1'-0"

FC-14

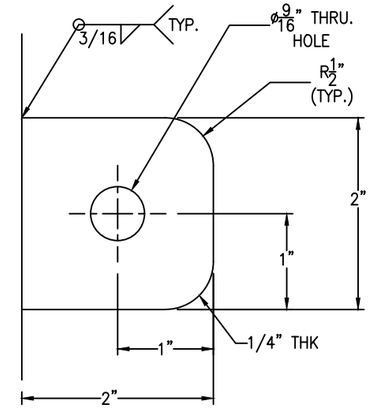

*NOTE: GROUND LUG IS LOCATED TO 112.5° & 202.5°.

GROUND LUG DETAIL

(2 REQ'D) SCALE: 1'-0" = 1'-0"

FC-14

*INSULATION RING WILL BE CENTERED ON SADDLES.

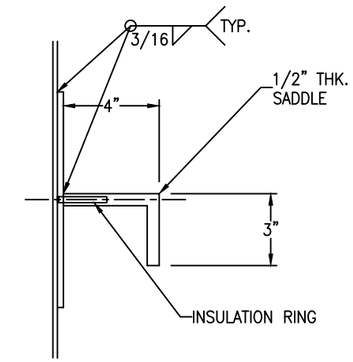

SADDLE DETAIL (SIDE VIEW)

(4 REQ'D) SCALE: 3" = 1'-0"

FC-14

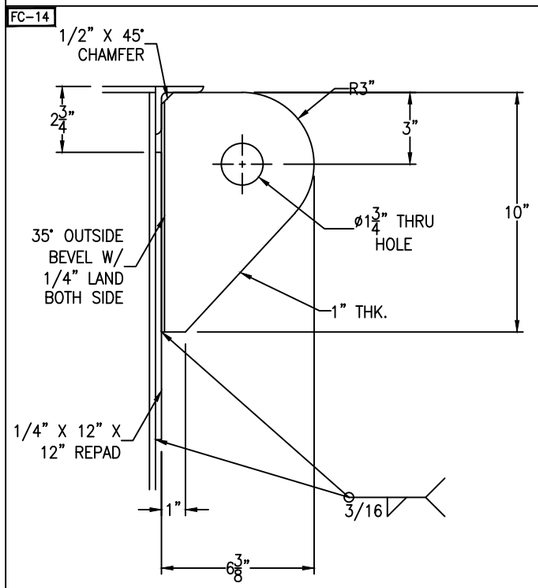

LIFT LUG DETAIL

(4 REQ'D) SCALE: 3" = 1'-0"

FC-14

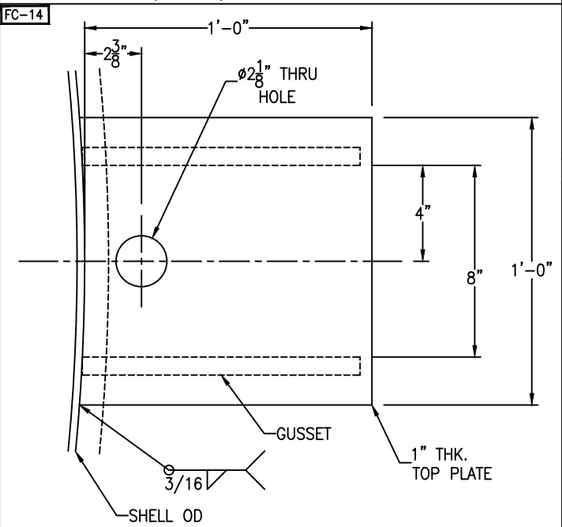

FC-14

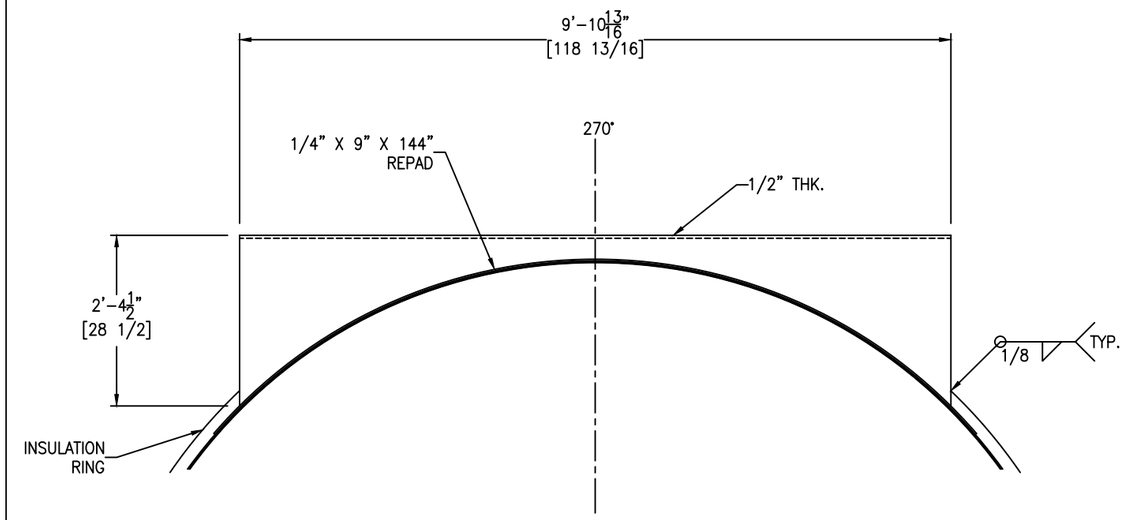

SADDLE DETAIL (TOP VIEW)

(4 REQ'D) SCALE: 3/4" = 1'-0"

FC-14

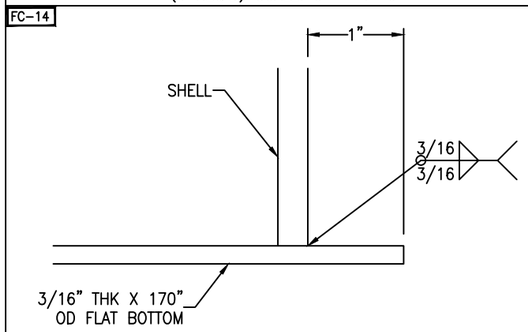

FLAT BOTTOM DETAIL

(1 REQ'D) SCALE: 1'-0" = 1'-0"

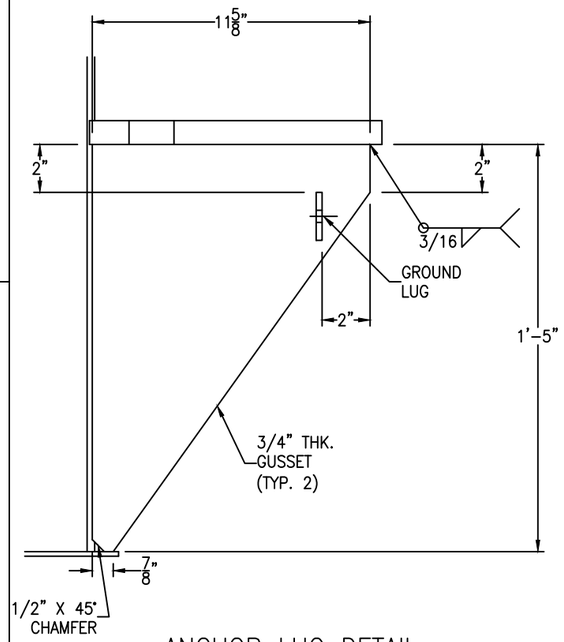

ANCHOR LUG DETAIL

(8 REQ'D) SCALE: 3" = 1'-0"

REV	D.BY	C.BY	DATE	DESCRIPTION
				AS BUILT
2	RS	AD	4/1/25	CERTIFIED REV 1
1	RS	AD	2/12/25	CERTIFIED
0	RS	AD	12/13/24	APPROVAL

⚠ REVISIONS

Savannah Tank & Equipment Corp.
1517 Telfair Road, Savannah, GA 31415
(912) 233-8902

DRAWN BY: RS
CHK'D BY: AD
APPROVED BY: NP
SCALE: 3/4" = 1'-0"

CDM-INC
CHILL WATER TANK
EQUIP. #
CUST. PO #24-1101-01

DRAWING NO.: 062-24-3 | SHT 3 OF 5 | REV. SET 2

SHOP RELEASE DATE: 2/24/25 SET # .

FC-14

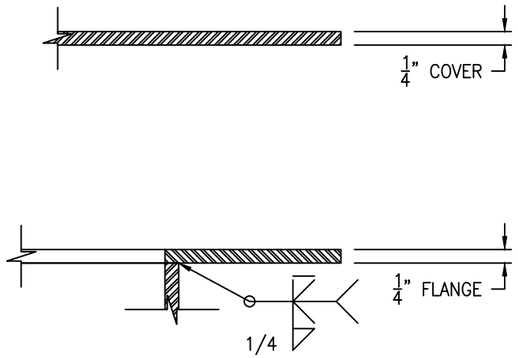

FLANGE/COVER DETAIL

(1 REQ'D) SCALE: 6" = 1'-0"

FC-14

Bolting for blind
(20) 5/8-11 NC x 1 1/2" HH BOLT
(20) 5/8-11 NC HH NUT
(1) 30" OD x 24" ID x 1/8" GASKET
W/ (20) 3/4" DIA. THRU HOLES EQUALLY SPACED ON 27 1/2" BC

Bolting for hinge
(2) 3/4-10 NC x 2 1/2" HH BOLT
(4) 3/4-10 NC HH NUT

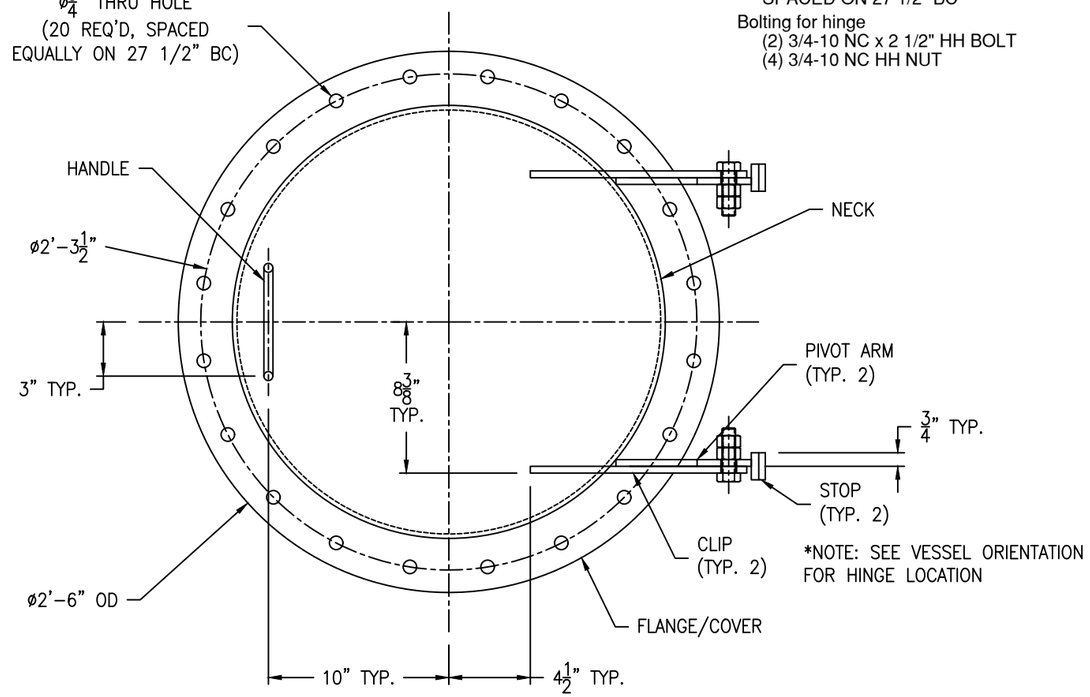

*NOTE: SEE VESSEL ORIENTATION FOR HINGE LOCATION

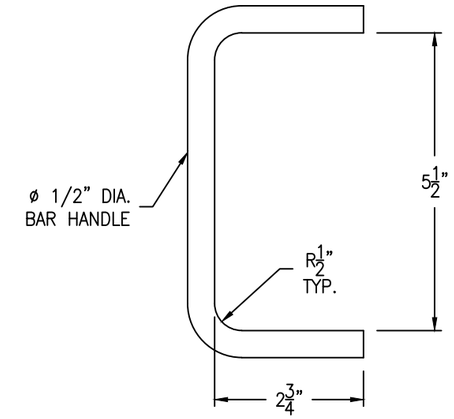

HANDLE DETAIL

(1 REQ'D) SCALE: 6" = 1'-0"

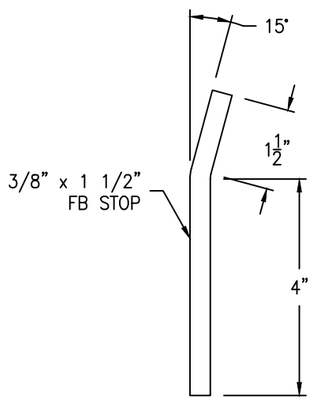

STOP DETAIL

(2 REQ'D) SCALE: 6" = 1'-0"

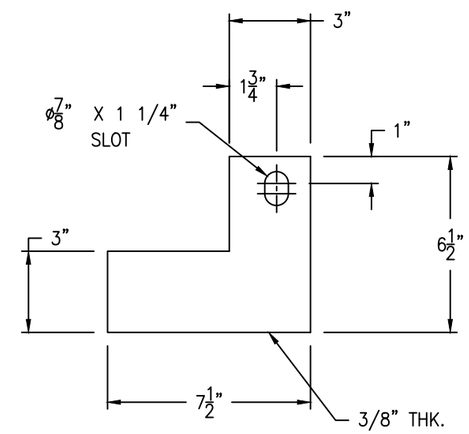

PIVOT ARM DETAIL

(2 REQ'D) SCALE: 3" = 1'-0"

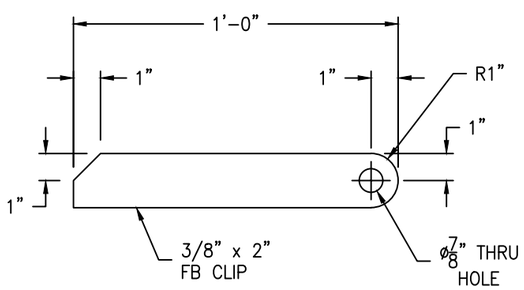

CLIP DETAIL

(2 REQ'D) SCALE: 3" = 1'-0"

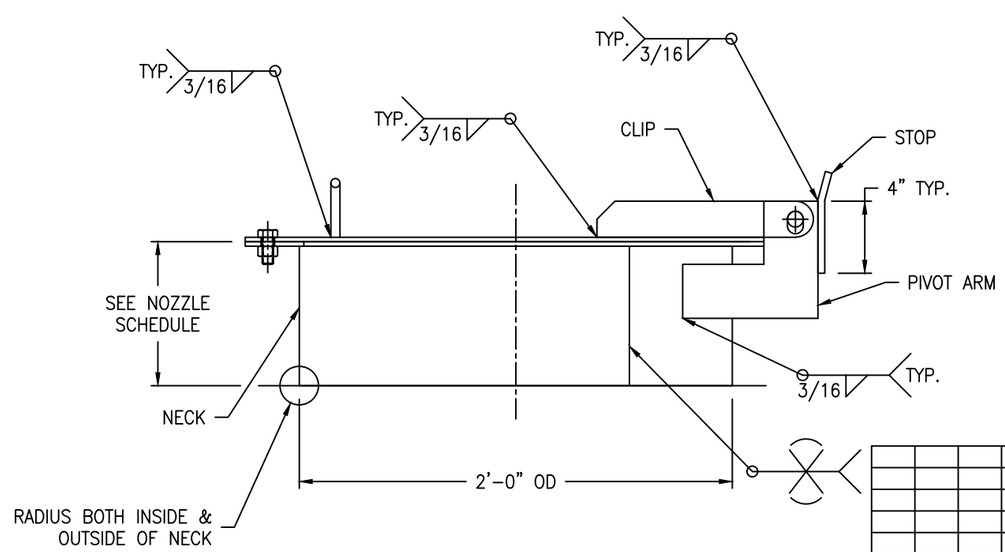

REV	D.BY	C.BY	DATE	DESCRIPTION
				AS BUILT
2	RS	AD	4/1/25	CERTIFIED REV 1
1	RS	AD	2/12/25	CERTIFIED
0	RS	AD	12/13/24	APPROVAL

1 REVISIONS

Savannah Tank & Equipment Corp.
1517 Telfair Road, Savannah, GA 31415
(912) 233-8902

DRAWN BY: RS
CHK'D BY: AD
APPROVED BY: NP
SCALE: 2" = 1'-0"

CDM-INC
CHILL WATER TANK
EQUIP. #
CUST. PO #24-1101-01

DRAWING NO.: 062-24-4 SHT 4 OF 5 REV. SET 2

SHOP RELEASE DATE: 2/24/25 SET # .

FC-14

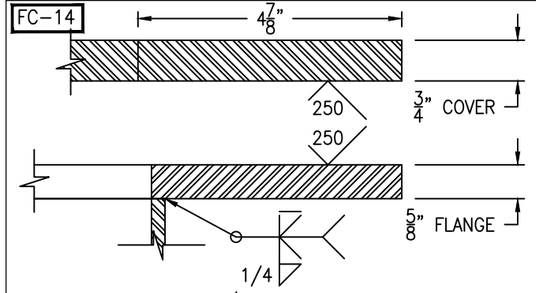

FLANGE/COVER DETAIL

(1 REQ'D) SCALE: 6" = 1'-0"

FC-14

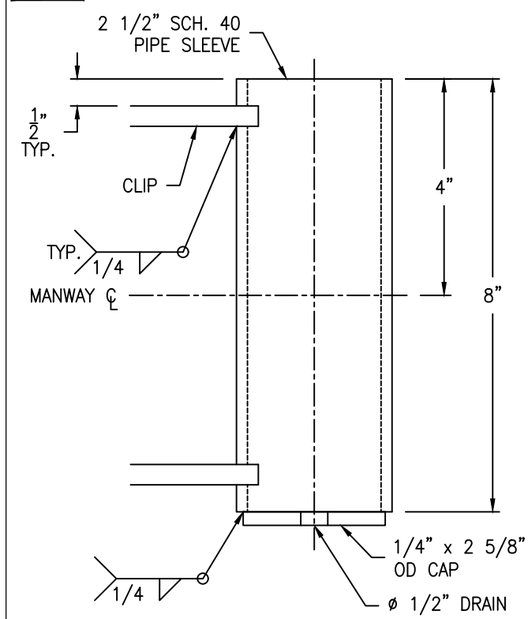

SLEEVE DETAIL

(1 REQ'D) SCALE: 6" = 1'-0"

FC-14

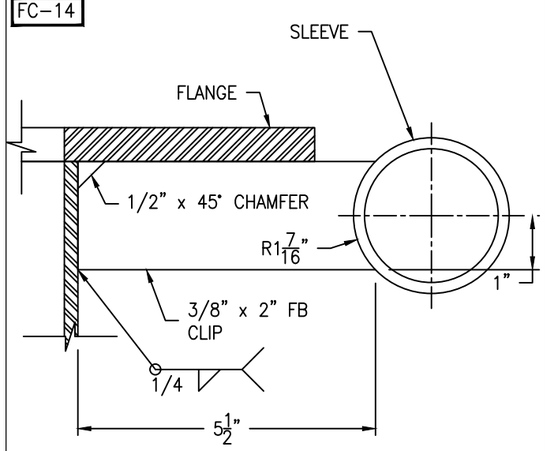

CLIP DETAIL

(2 REQ'D) SCALE: 6" = 1'-0"

FC-14

Bolting for blind
(28) 3/4-10 NC x 2 1/2" HH BOLT
(28) 3/4-10 NC HH NUT
(1) 29 3/8" OD x 24" ID x 1/8" GASKET

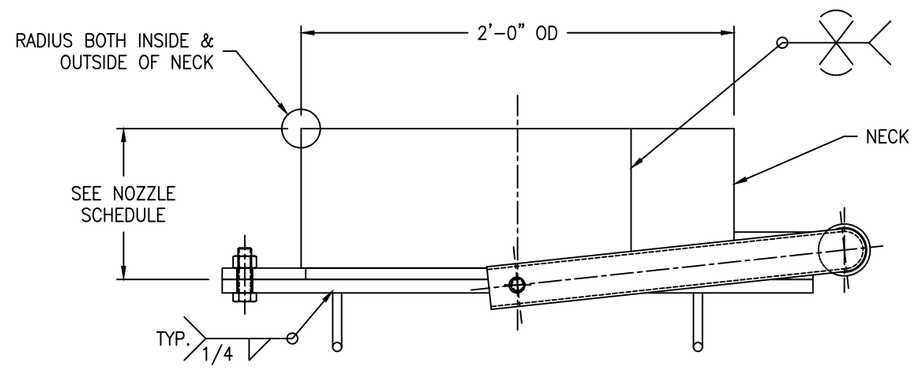

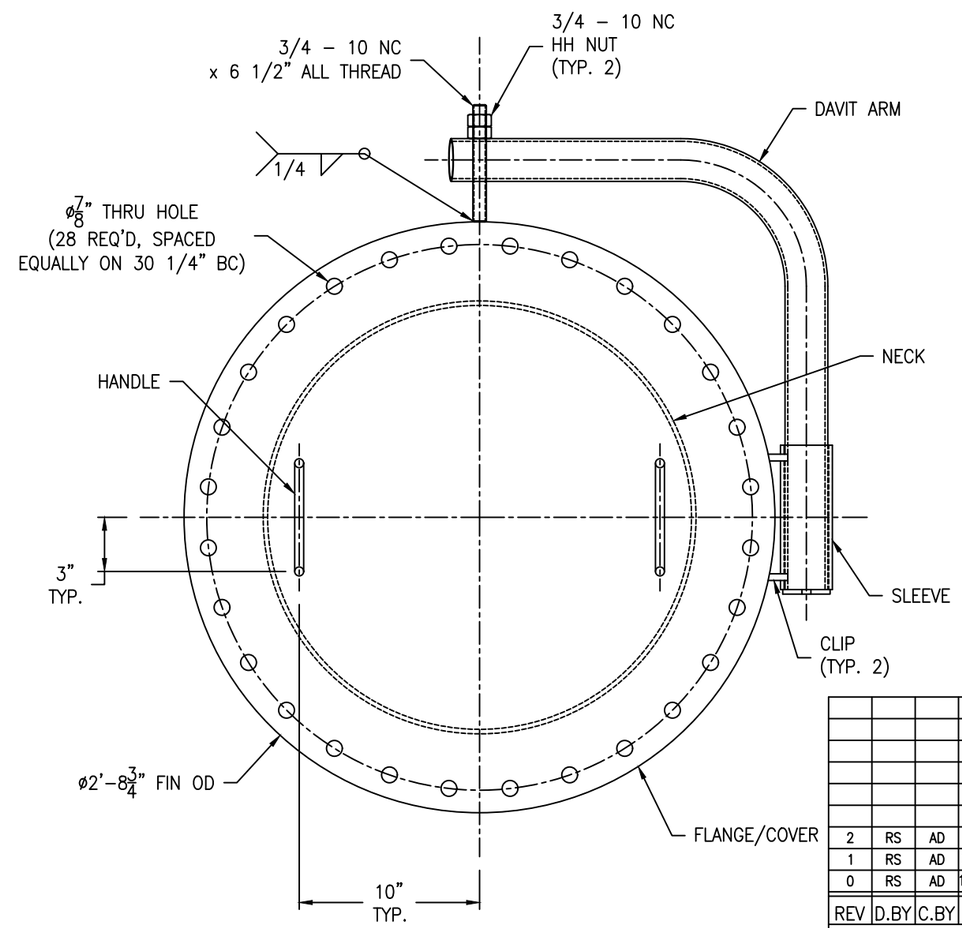

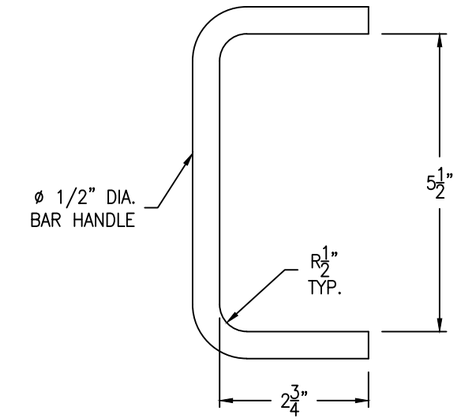

HANDLE DETAIL

(2 REQ'D) SCALE: 6" = 1'-0"

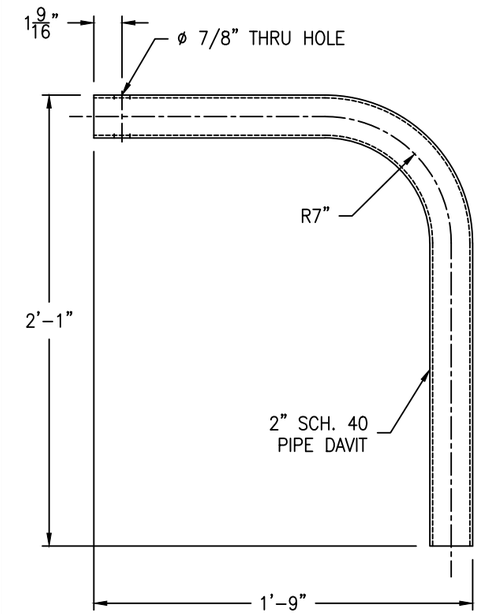

DAVIT ARM DETAIL

(1 REQ'D) SCALE: 2" = 1'-0"

REV	D.BY	C.BY	DATE	DESCRIPTION
				AS BUILT
2	RS	AD	4/1/24	CERTIFIED REV 1
1	RS	AD	2/12/24	CERTIFIED
0	RS	AD	12/13/24	APPROVAL

1 REVISIONS

Savannah Tank & Equipment Corp.
1517 Telfair Road, Savannah, GA 31415
(912) 233-8902

DRAWN BY: RS
CHK'D BY: AD
APPROVED BY: NP
SCALE: 2" = 1'-0"

CDM-INC
CHILL WATER TANK
EQUIP. #
CUST. PO #24-1101-01

DRAWING NO.: 062-24-5 SHT 5 OF 5 REV. SET 2

SHOP RELEASE DATE: 2/24/25 SET # .